create your future

Sodick



Linear Motor EDM

AD35L/AD55L

New Features Support Cost Effective Machining

Sodick's expertise in EDM innovation using 3D design systems, the latest CAE technologies and numerous simulations have made it possible to create an improved basic machine structure of optimised rib arrangements which increase rigidity by approximately 70%. Using the new AD series of machine deformation is minimised, allowing optimum performance at high-speed and rapid acceleration linear motors. Furthermore the original design of an independent X and Y-axis plus an efficient machine layout leads to a longer stroke, smaller footprint and highly accurate machining capability.

New Tech 1

LN Control with 15" Touch Screen

The cutting edge electric power supply, "LN3", which is capable of high-speed, high-precision and high-efficiency machining. The outstanding performance of the power supply is provided by a modern control theory-based NC system. The new ergonomically designed LN control panel allows for stress-free operation through its Windows operation system.



New Tech 2

Extra Large Work Tank

An even bigger dimension of the new work tank allows the operator to work with a maximum work piece size of 975 x 555 x 350mm (AD35L) and 1200 x 800 x 500 mm (AD55L). The manual tank door enables a better access for setup.



New Tech 3

"SGF Plus" Nano Wear Discharge Unit

The power supply unit is equipped with the "SGF" discharge unit. "SGF" minimises graphite electrode wear and maximises cutting speed offering the highest performance level possible, which allows "Zero" wear machining. The "SGF" circuit achieves rough cutting to finishing using only a single graphite electrode. This eliminates the requirement for multiple electrodes, and therefore reduces manufacturing time.

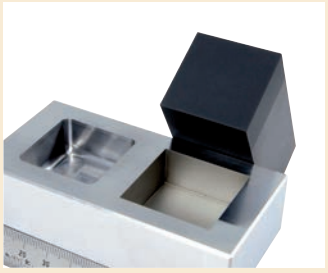

New Tech 4

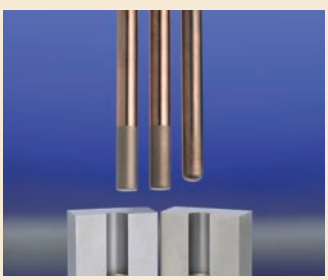

Complete Machining Solution

Sodick offers the AD series as a complete package, ready for efficient machining; C-Axis, Shuttle ATC, External USB and Dielectric chiller come as standard.



Core Technologies For Outstanding Performance

In-House Developed Linear Motor on X, Y and Z Axes

Sodick's in-house developed linear motor is a direct drive, vibration free device which has unrivalled acceleration and positioning accuracy with no backlash. It's high dynamic responsiveness, stability for precision machining, and performance does not diminish over time and remains maintenance free. The linear motor achieves even better performance thanks to the Motion Controller (K-SMC) which Sodick has perfected over the years.

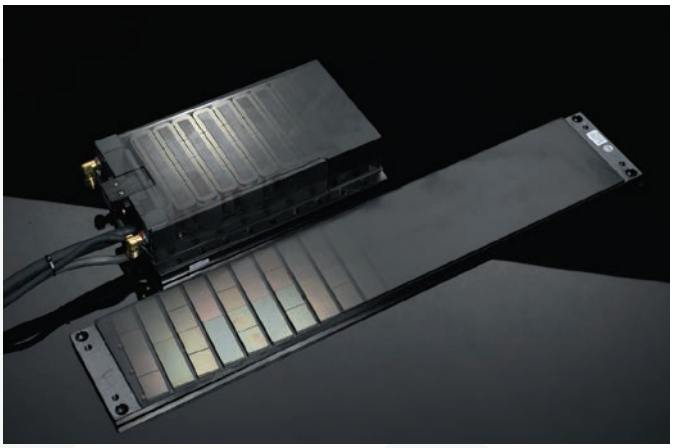

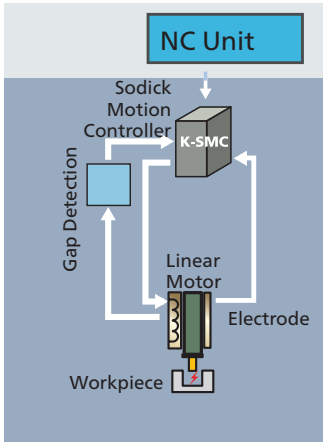

Linear Motor Drive

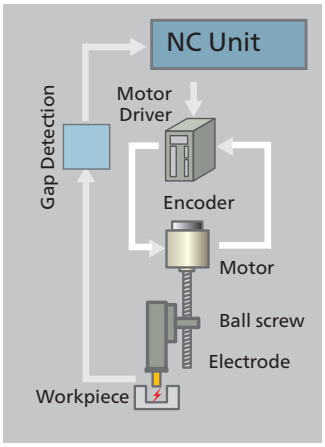

Conventional Ball Screw

Ceramic Work-zone

Sodick AD Sink EDM series is constructed using ceramic components for the work stand table and critical parts, all of which are built in-house to ensure high precision machining with better electrical insulation, abrasion resistance and rigidity. Ceramics are ideal for high precision machining due to their very low thermal expansion coefficient (less than one third than that of cast iron), high rigidity and resistance to ageing.



LN Professional Maximises The Capability of Linear Motors



LN Professional offers a wide range of applicable cutting patterns to respond to various kinds of machining needs. For each machining pattern, optimum machining conditions and axis motions are available. Different kinds of machining can be performed through simple operations without depending on operator's skill and experience. If the core pin pattern is selected, for example, it automatically shows the most suitable machining conditions and axis motions required. The LN Professional also comes complete with a graphite electrode search screen.



Shuttle ATC

The shuttle ATC, which is available as a standard accessory, allows you to perform operations unattended.

AD35L: 4 stations

AD55L: 6 stations



C-Axis (SEC-10)

The SEC-10 offers 1/1,000,000 of standard resolution. The C axis enables high precision indexing with direct-drive and continuous rotation (20rpm), expanding the machining capabilities.

Specifications

AD35L

Front View

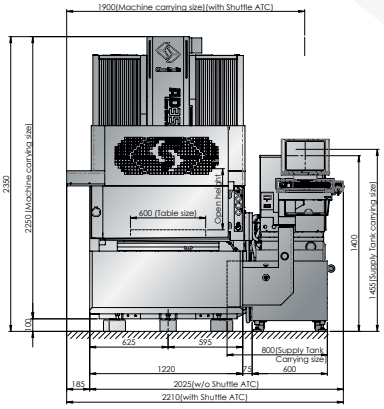

Side View

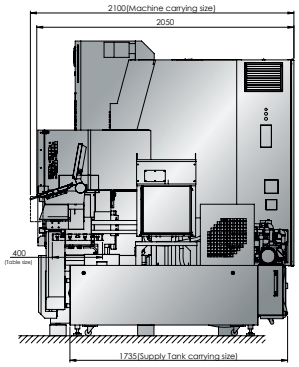

AD55L

Front View

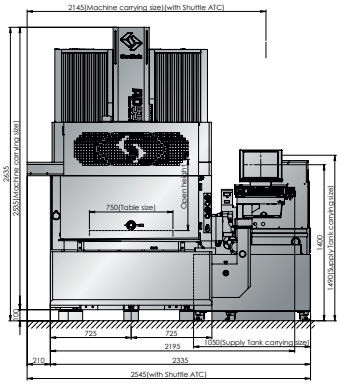

Side View

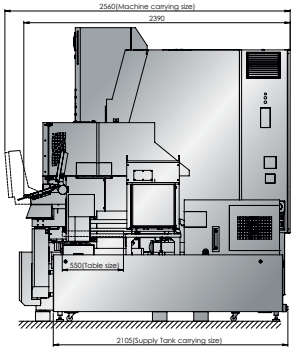

Machine	AD35L	AD55L
X-/Y-/Z- axis travel	350 x 250 x 270 mm	600 x 400 x 400 mm
Work tank inner dimensions (W x D x H)	975 × 555 × 350 mm	1,200 x 800 x 500 mm
Work tank fluid level (Min. to Max.)	170 ~ 300 mm	170 ~ 450 mm
Work tank capacity	180 L	470 L
Ceramic table size (W x D)	600 × 400 mm	750 x 550 mm
Maximum weight of work piece	550 kg	1,000 kg
Maximum weight of electrode	50 kg	50 kg
Distance from floor to table top	810 mm	810 mm
Machine dimensions (W x D x H)	2,025 x 2,040 x 2,350 mm	2,335 x 2,435 x 2,635 mm
Machine installation space (W x D)	2,800 x 3,140 mm	3,300 x 3,535 mm
Machine weight	2,920 kg	4,020 kg
Air pressure	0.65 MPa	0.65 MPa
Air flow	100 NL/min	100 NL/min
Total power input	3-phases 50/60Hz, 7 KVA	3-phases 50/60Hz, 7.5 KVA

Dielectric tank	AD35L	AD55L
External dimensions (W x D x H)	800 × 1,735 × 1,455 mm	1,050 x 2,105 x 1,490 mm
Weight (empty)	400 kg	450 kg
Dielectric tank capacity	400 L	800 L
Dielectric fluid filtration method	2 replaceable paper filter	2 replaceable paper filter

Standard Features	
10 year warranty on positioning accuracy	15" TFT touch screen display
LN Professional	Dielectric cooling unit
Linear motor cooling unit	Automatic voltage regulator
Linear scales (X, Y, Z axis)	Paper filter (2)
Remote controller	Fire extinguisher
USB port	Mouse
Shuttle ATC	LAN connection
C-Axis (SEC-10)	Tool kit
SGF Plus Circuit	Work light

The dielectric chillers on Sodick machines contain either fluorinated greenhouse gas R410A or R407C.
* Due to ongoing research, specifications are subject to change without prior notice.

Sodick

create your future

Sodick Europe Ltd.

Agincourt Road
Warwick, CV34 6XZ
United Kingdom

Sodick Contact

Phone +44 (0) 19 2669 8888
email europe@sodick.eu
online www.sodick.eu